Black-Stone Standalone Air Cabinet
600mm OWNER'S MANUAL

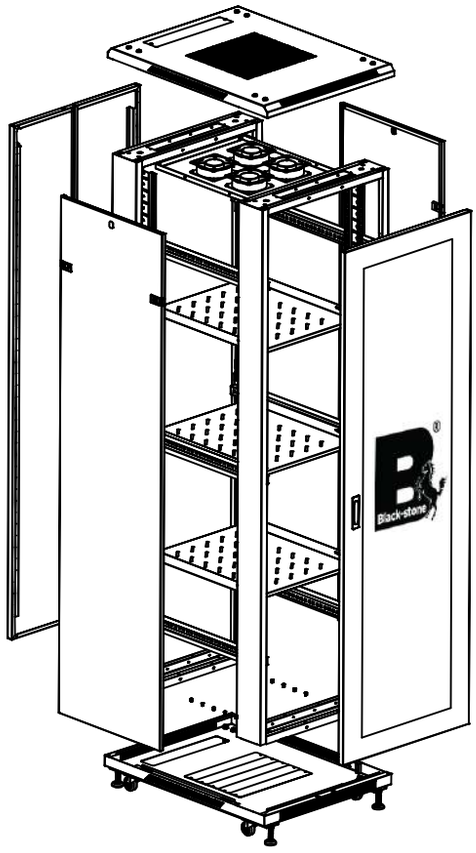

Packing List

1-Bottom Tray - 1pcs
2-Top Tray - 1pcs
3-Frame - 2pcs
4-Horizontal Support -
4pcs(for under 32U-hight)
6pcs(for over 32U-hight)
5-Vertical Support - 4pcs
6-Side Door - 2pcs
7-Front Door - 1pcs
6pcs(for over 32U-hight)
5-Vertical Support - 4pcs
6-Side Door - 2pcs
8-Rear Door - 1pcs
9-Shelves -
3pcs(for over 42U-hight)
2pcs(from 32U-high to 42U -hight)
1pcs(for under 32U-hight)
10-Fan Tray - 1pcs
11-Cover Panel - 3pcs

Black-stone

© 2022 InfraStone , LLC

info@infrastone.com

Accessories Package list

1-M12*L90 Supporting Leg- 4pcs
2-Castor- 4pcs
3-Anti-skid Stop - 4pcs
4-M8*12 Hexagon Socket Screw - 16pcs
5-M8 Flange Nut - 16PCS
6-M6*12 Screw -
60pcs(for over 42U-high)
56pcs(from 32U-high to 42U -hight)
36pcs(for under 32U-hight)
7-4mm Plastic Washer - 2pcs
8-M4*8 Self-tapping Screw - 18pcs
9-M6*12 Self-tapping Screw - 16pcs
10-M6 Cage Nut -
60pcs(for over 42U-hight)
56pcs(from 32U-high to 42U -hight)
36pcs(for under 32U-hight)
11-M6 Plastic Washer -
60pcs(for over 42U-hight)
56pcs(from 32U-high to 42U -hight)
36pcs(for under 32U-hight)

Assembly Instructions

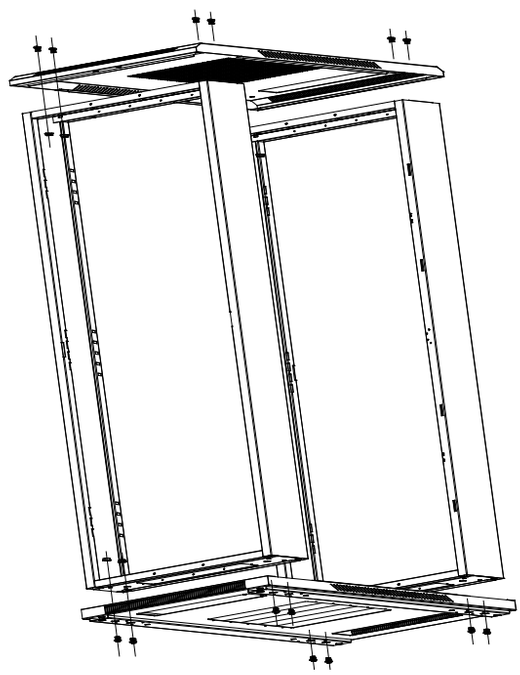

1. Assemble Base Structure

Attach the top and bottom trays to the frame using 16 M8*12 hex screws and 16 M8 flange nuts.

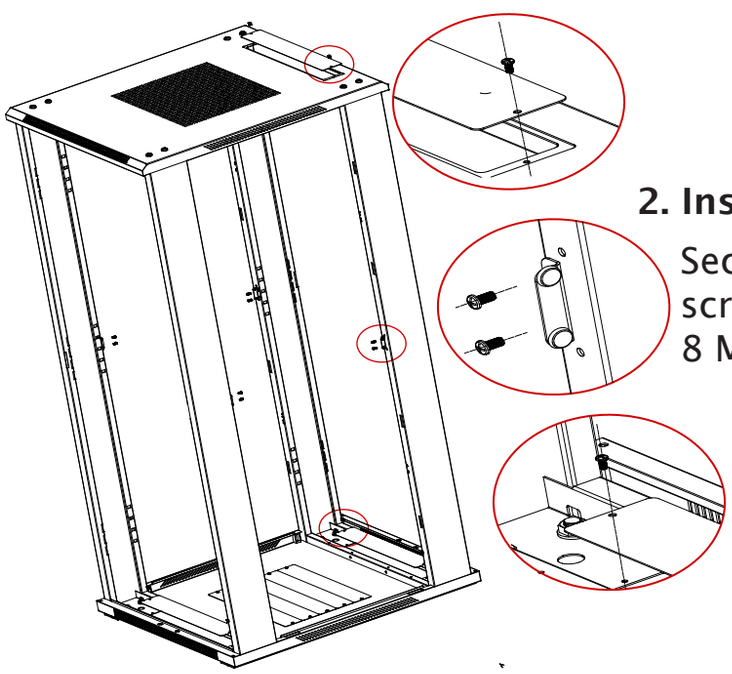

2. Install Top Cover & Anti-Skid Stops

Secure the top cover with 6 M48 self-tapping screws. Then, attach the anti-skid stops with 8 M48 self-tapping screws.

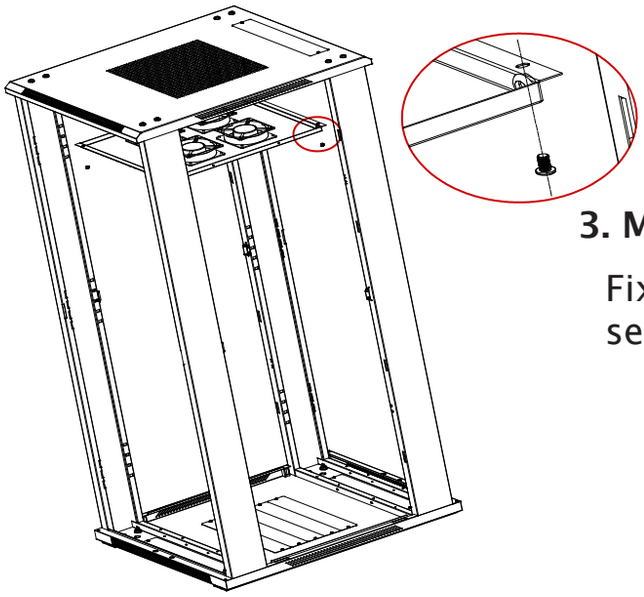

3. Mount Fan Tray

Fix the fan tray in place using 4 M4*8 self-tapping screws.

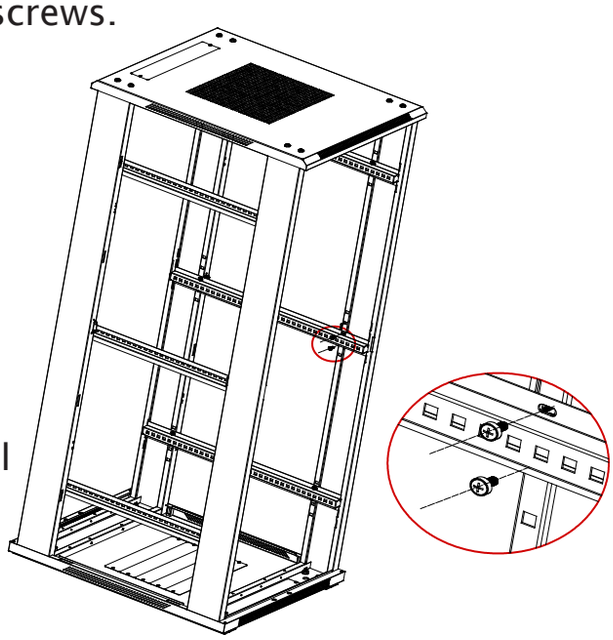

4. Attach Horizontal Supports

Use 24 M6*12 screws, M6 cage nuts, and M6 plastic washers to secure the horizontal supports.

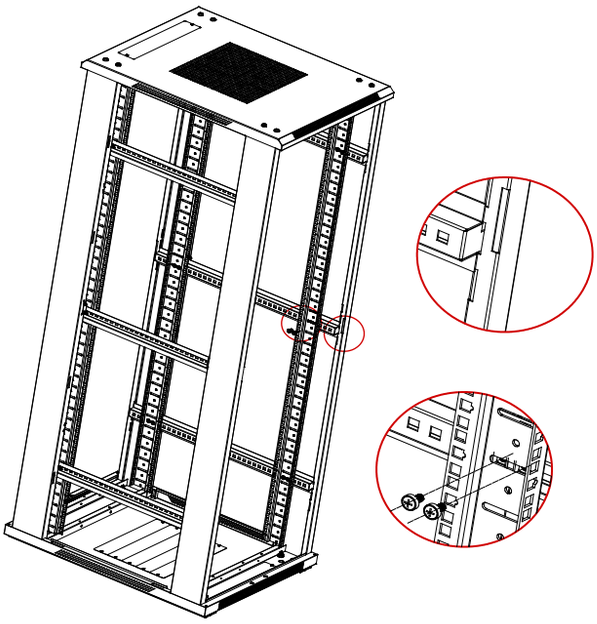

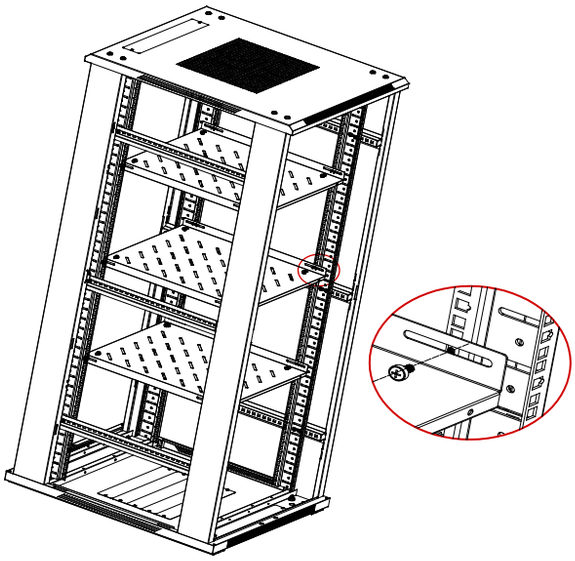

5. Attach Vertical Supports

Similarly, use 24 M6*12 screws, M6 cage nuts, and M6 plastic washers for the vertical supports.

6. Install Shelves

Mount the shelves using 12 M6*12 screws, M6 cage nuts, and M6 plastic washers.

Black-stone

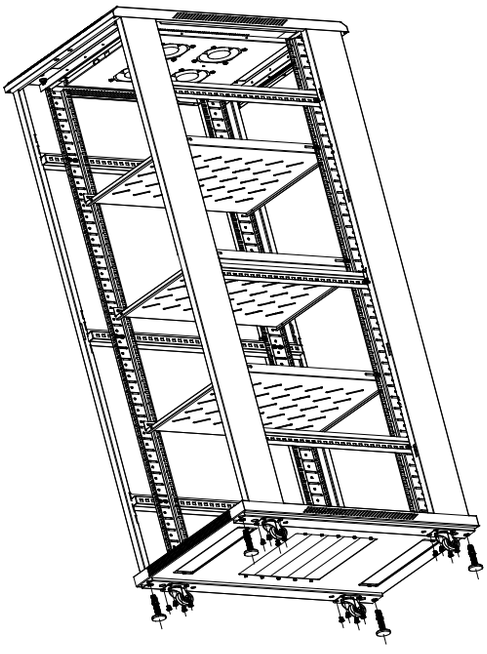

7. Add Castors and Supporting Leg

Use 16 M612 self-tapping screws to attach the castors, and install the M12L90 supporting leg.

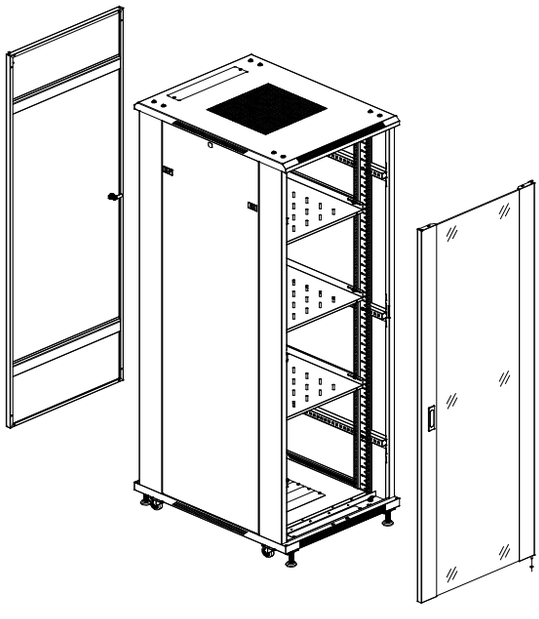

8. Attach Side Doors

The side doors are tool-free assembly; simply attach as instructed.

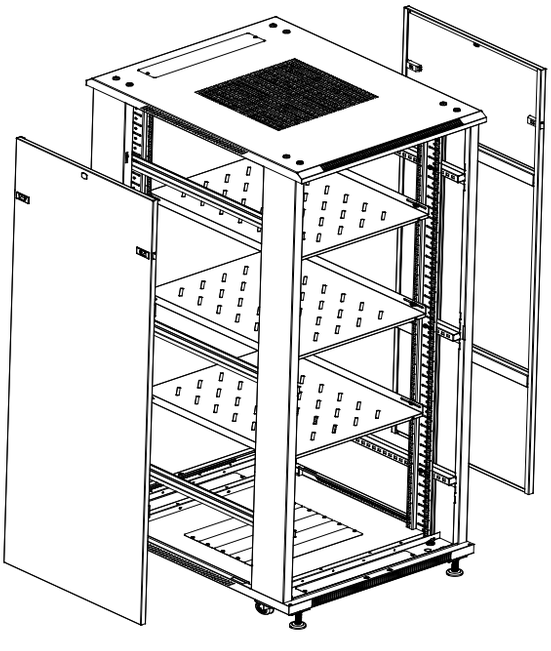

9. Assemble Front and Rear Doors

Secure the front and rear doors using 4mm plastic washers.

Black-stone